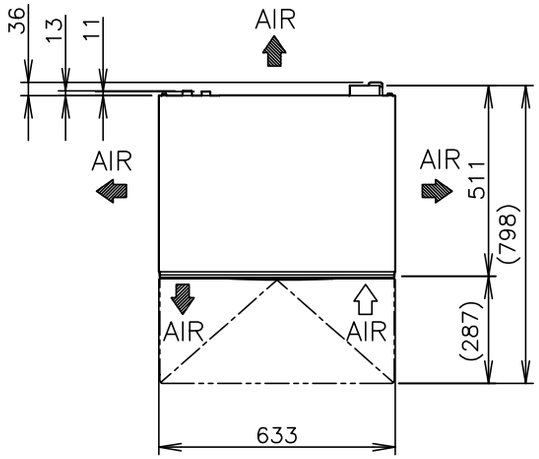
36
13
11
AIR
AIR
AIR
511
(798)
AIR
AIR
(287)
633

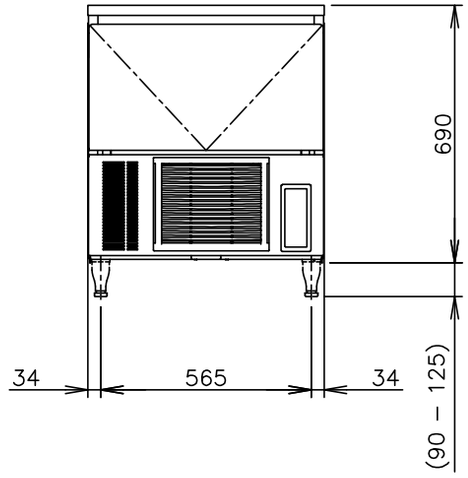
690
34
565
34
(90 – 125)

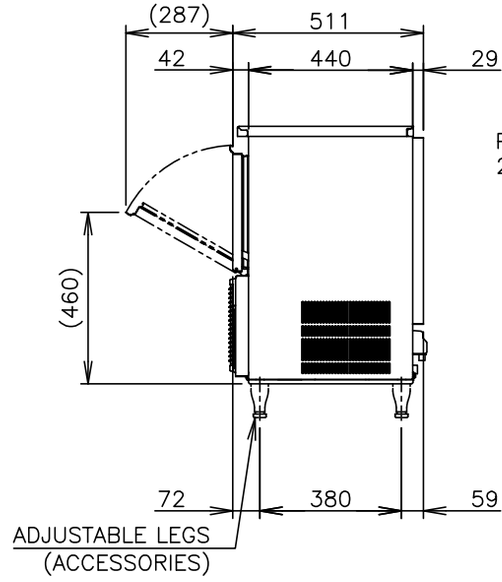
(287)
511
42
440
29
(460)
72
380
59
ADJUSTABLE LEGS
(ACCESSORIES)

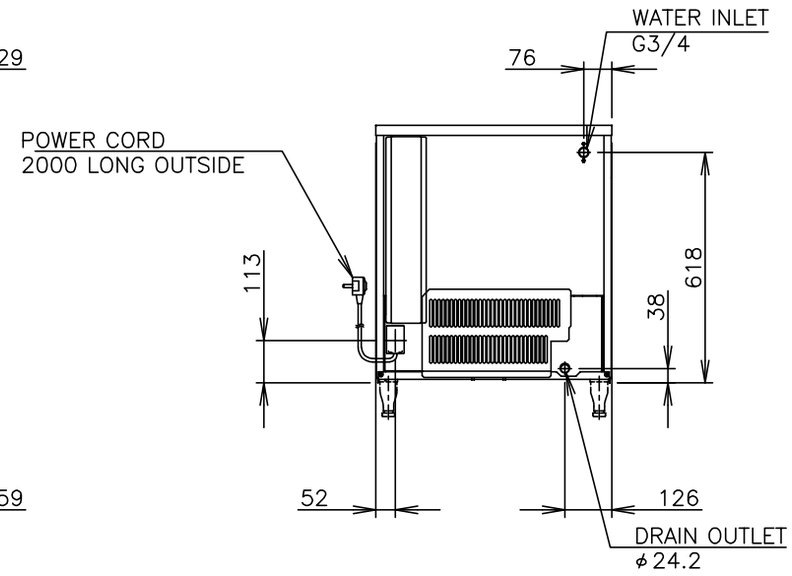
WATER INLET
G3/4
76
POWER CORD
2000 LONG OUTSIDE
113
618
38
52
126
DRAIN OUTLET
φ24.2