Electrolux PROFESSIONAL

Modular Cooking Range Line thermaline 90 - 2 Zone Full Surface Induction Top on Open Base, 2 Sides, H=700

ITEM #

MODEL #

NAME #

SIS #

AIA #

589049 (MCJBECE1AO) Full Surface Induction Top on Open Base, 2 zones, two-side operated - H2

Short Form Specification

Item No.

Unit constructed according to DIN 18860_2 with 20 mm drop nose top and 70 mm recessed plinth. Internal frame for heavy duty sturdiness in stainless steel. 2 mm top in 1.4301 (AISI 304). Flat surface construction, easily cleanable. THERMODUL connection system enables seamless worktop when units are connected and avoids soil penetrating. Large multi-coil glass ceramic surface without any "dead" spots allows for quick and easy cleaning. Features 9 power levels with fast deployment to full heating power and very low heat dissipation to the kitchen. Overheat protection switches off the supply in case of overheating. Metal knobs with embedded hygienic silicon "soft" grip enable easier handling and cleaning.
IPX5 water resistance certification.
Configuration: Freestanding, two-side operated, on open base, hygienic class H2.

APPROVAL:

Main Features

- Overheat protection: a temperature sensor switches off the supply in case of overheating.
- Pans can easily be moved from one area to another without lifting.
- The smooth glass-ceramic surface can be quickly and easily cleaned, thus providing maximum hygiene.
- All major components may be easily accessed from the front.
- THERMODUL connection system creates a seamless work top when units are connected to each other thus avoiding soil penetrating vital components and facilitating the removal of units in case of replacement or service.
- Metal knobs with embedded hygienic silicon "soft" grip for easier handling and cleaning. The special design of the controls prevent infiltration of liquids or soil into vital components.
- Large visible digital display manufactured in tempered glass to resist heat and chemicals, showing temperatures or power settings. The display also shows on/off status of the appliance and on/off status of the heating elements.
- 9 power levels.
- Almost the entire surface of the ceramic plate can be used without “dead” spots.
- Fast deployment with full heating power immediately.
- Low heat dissipation to the kitchen.
- The large surface multi-coil induction top offers a substantial increase in pan and pot capacity thanks to the seamless transition between individual heating zones, ideal for à la carte operation.

Construction

- Control light for each zone.
- 2 mm top in 1.4301 (AISI 304).
- Unit constructed according to DIN 18860_2 with 20 mm drop nose top and 70 mm recessed plinth.
- IPX5 water resistance certification.
- Flat surface construction with minimal hidden areas to easily clean all surfaces
- Internal frame for heavy duty sturdiness in stainless steel.

Sustainability

- This model is compliant with Swiss Energy Efficiency Ordinance (730.02).

Optional Accessories

• Scraper for cook tops	PNC 910601	❑
• Connecting rail kit, 900mm	PNC 912502	❑
• Stainless steel side panel, 900x700mm, freestanding	PNC 912512	❑
• Portioning shelf, 500mm width	PNC 912523	❑
• Portioning shelf, 500mm width	PNC 912553	❑
• Folding shelf, 300x900mm	PNC 912581	❑
• Folding shelf, 400x900mm	PNC 912582	❑
• Fixed side shelf, 200x900mm	PNC 912589	❑
• Fixed side shelf, 300x900mm	PNC 912590	❑
• Fixed side shelf, 400x900mm	PNC 912591	❑
• Stainless steel front kicking strip, 500mm width	PNC 912631	❑
• Stainless steel side kicking strip left and right, freestanding, 900mm width	PNC 912657	❑
• Stainless steel plinth, freestanding, 500mm width	PNC 912955	❑
• Connecting rail kit: modular 90 (on the left) to ProThermetic tilting (on the right), ProThermetic stationary (on the left) to ProThermetic tilting (on the right)	PNC 912975	❑
• Connecting rail kit: modular 80 (on the right) to ProThermetic tilting (on the left), ProThermetic stationary (on the right) to ProThermetic tilting (on the left)	PNC 912976	❑
• Endrail kit, flush-fitting, left	PNC 913111	❑
• Endrail kit, flush-fitting, right	PNC 913112	❑
• Endrail kit (12.5mm) for thermaline 90 units, left	PNC 913202	❑
• Endrail kit (12.5mm) for thermaline 90 units, right	PNC 913203	❑
• Insert profile d=900	PNC 913232	❑
• Perforated shelf for warming cabinets and cupboard bases (two-side operated for TL90)	PNC 913236	❑
• Side reinforced panel only in combination with side shelf, for freestanding units	PNC 913260	❑
• Shelf fixation for TL80-85-90 one-side operated, TL80 two-side operated	PNC 913279	❑
• Filter W=500mm	PNC 913664	❑
• Stainless steel dividing panel, 900x700mm, (it should only be used between Electrolux Professional thermaline Modular 90 and thermaline C90)	PNC 913672	❑
• Stainless steel side panel, 900x700mm, flush-fitting (it should only be used against the wall, against a niche and in between Electrolux Professional thermaline and ProThermetic appliances and external appliances - provided that these have at least the same dimensions)	PNC 913688	❑

The company reserves the right to make modifications to the products without prior notice. All information correct at time of printing.

Modular Cooking Range Line
thermaline 90 - 2 Zone Full Surface Induction Top on Open Base, 2 Sides, H=700

Front

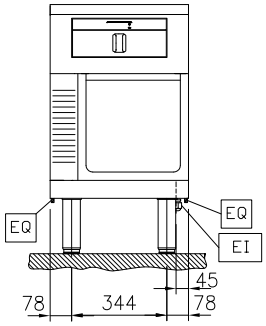

Side

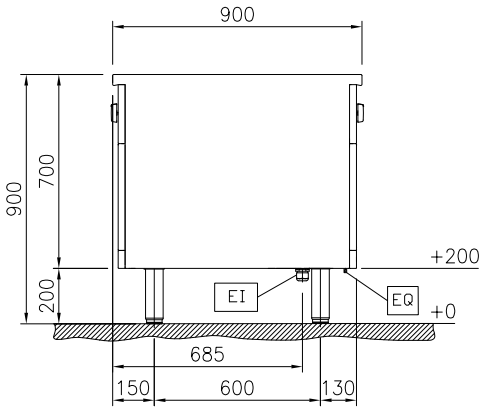

EI = Electrical inlet (power)
EQ = Equipotential screw

Top

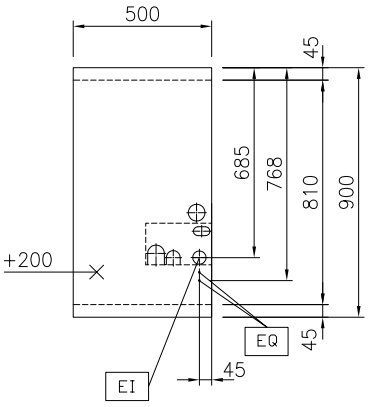

Electric

Supply voltage:	
589049 (MCJBECE1AO)	400 V/3N ph/50/60 Hz
Total Watts:	14 kW

Key Information:

Configuration:	Both-Sides Operated;On Base
Front Plates Power:	7 - 0 kW
Back Plates Power:	7 - kW
Front Plates dimensions:	340x370
Back Plates dimensions:	340x370
Induction Top Dimensions (width):	500 mm
Induction Top Dimensions (depth):	900 mm
External dimensions, Width:	500 mm
External dimensions, Depth:	900 mm
External dimensions, Height:	700 mm
Storage Cavity Dimensions (width):	340 mm
Storage Cavity Dimensions (height):	330 mm
Storage Cavity Dimensions (depth):	740 mm
Net weight:	51 kg

Sustainability

Current consumption:	21.5 Amps

The company reserves the right to make modifications to the products without prior notice. All information correct at time of printing.

2024.11.25