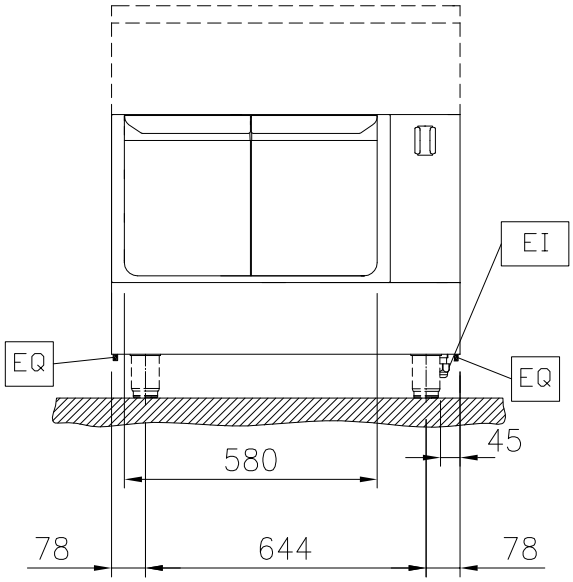

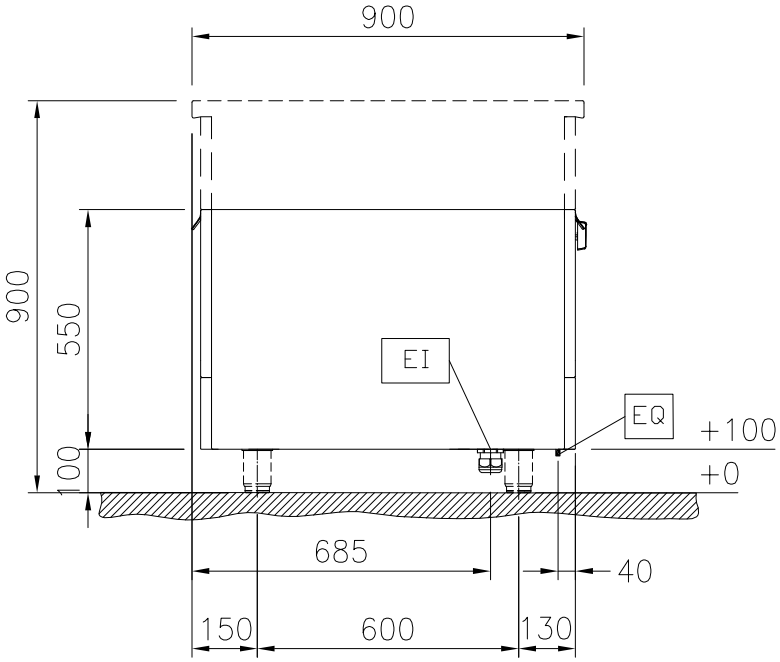

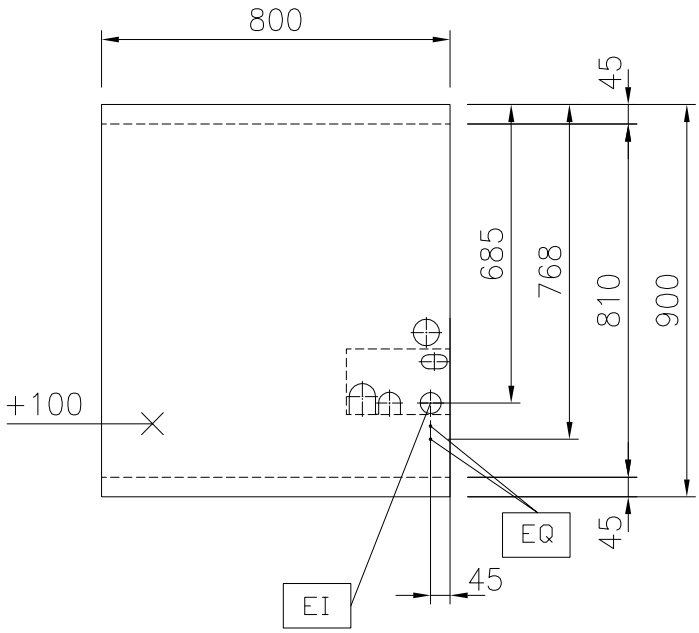

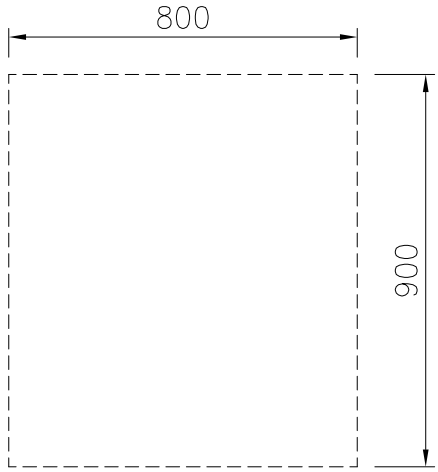

CHG87.8172.094