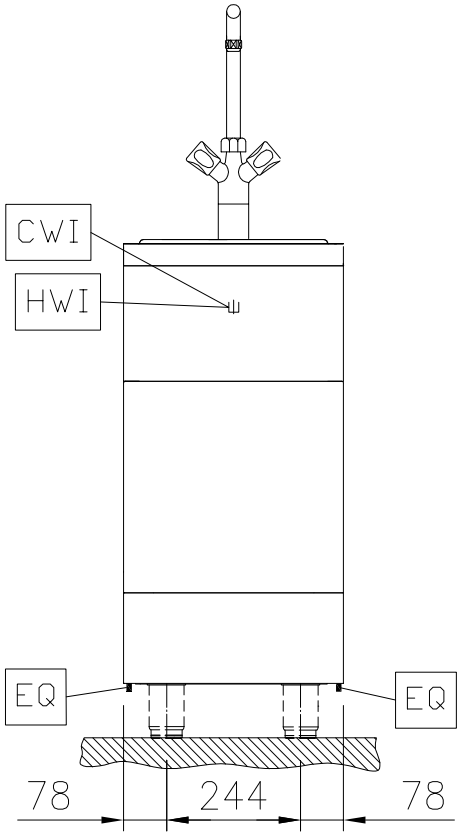

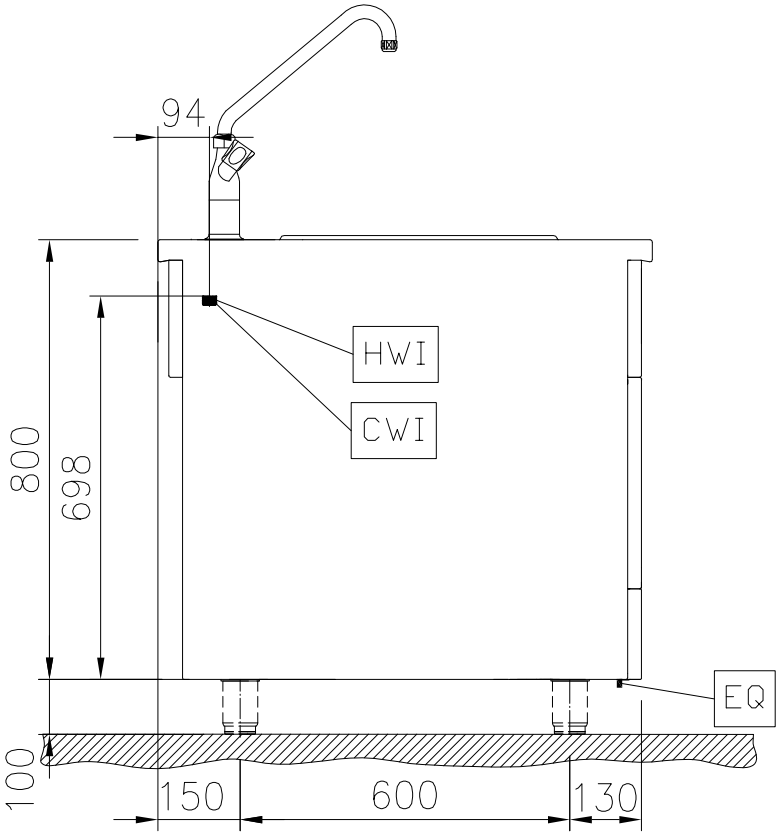

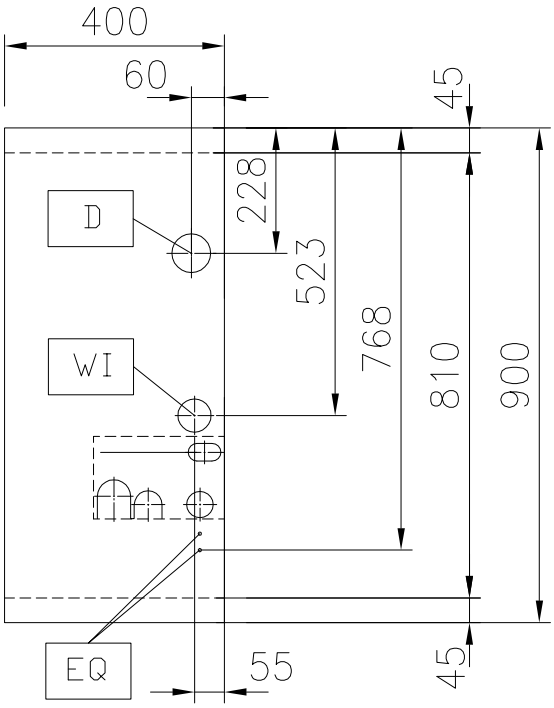

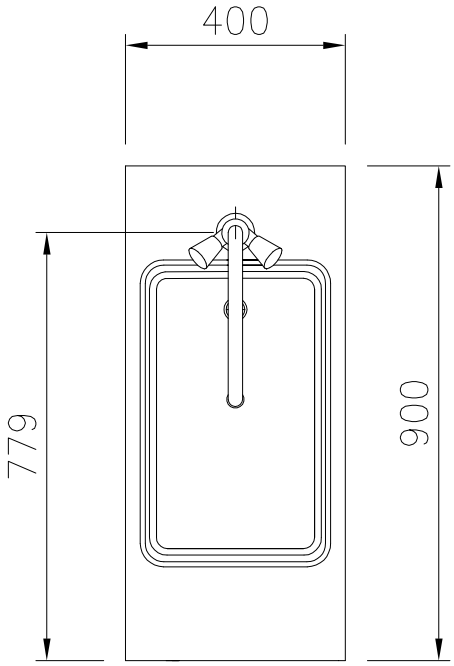

CHG 87.8188.003