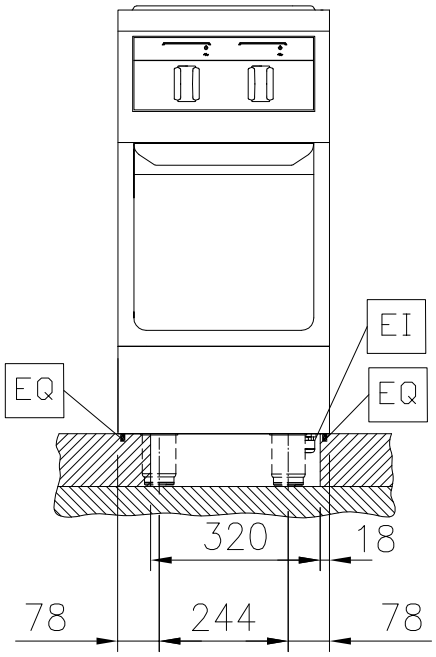

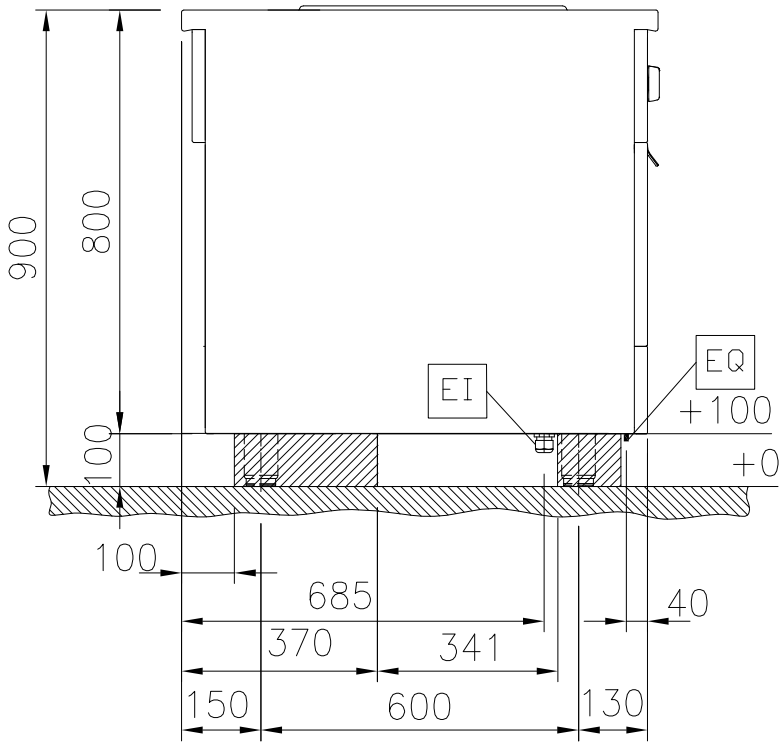

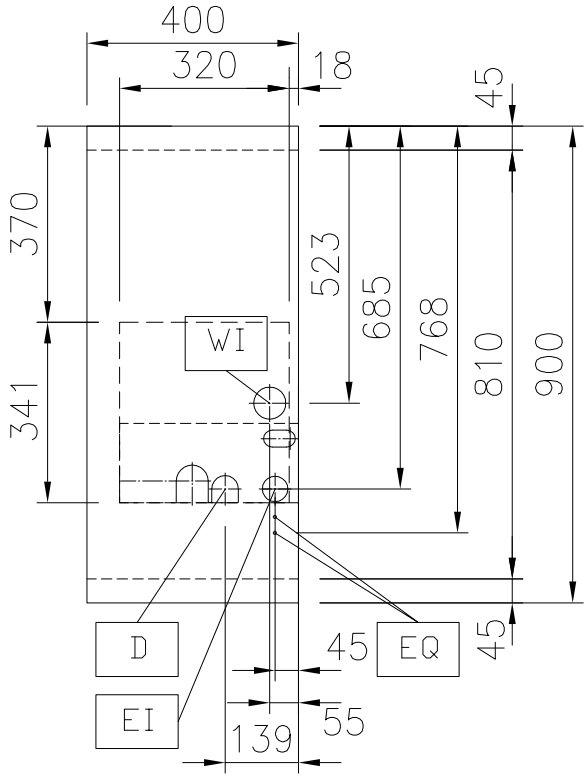

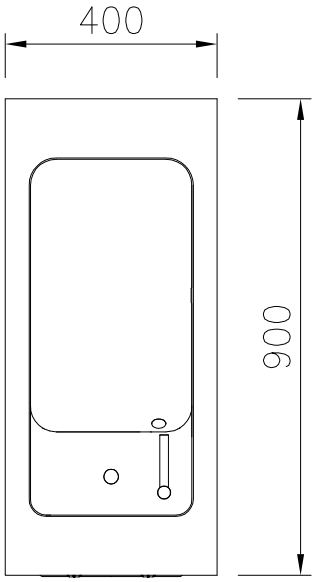

CHG 87.8120.023