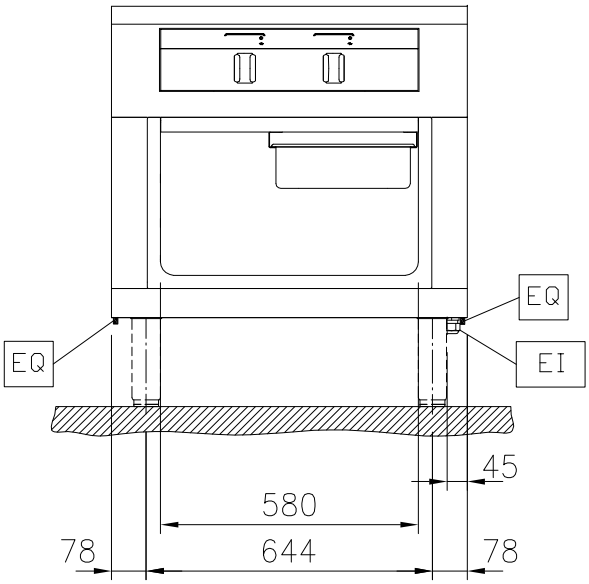

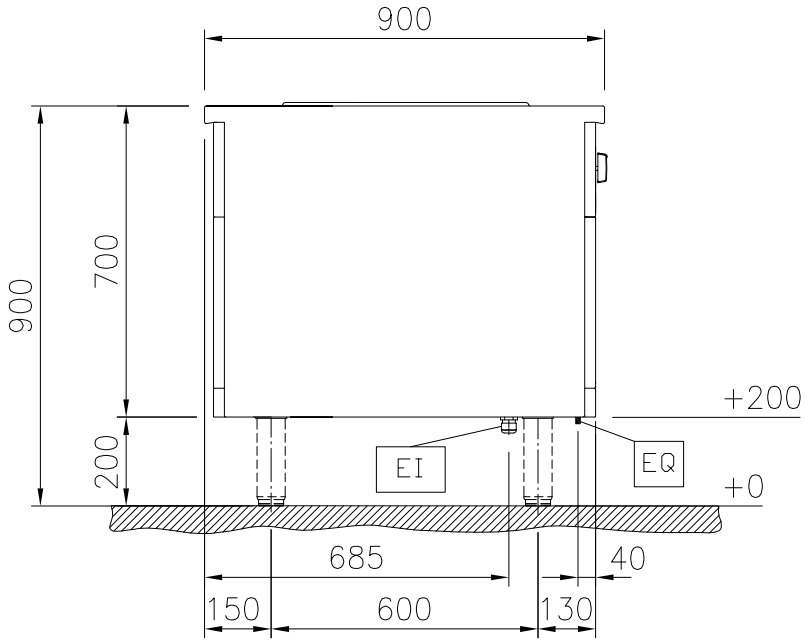

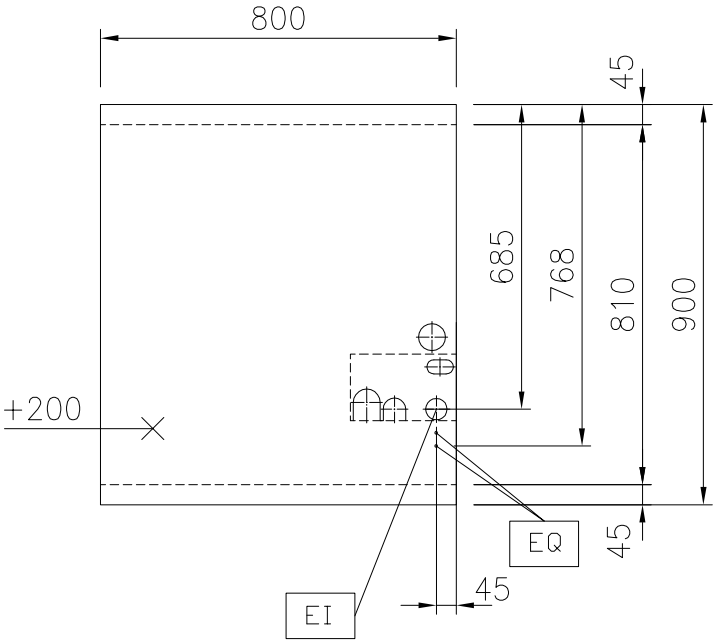

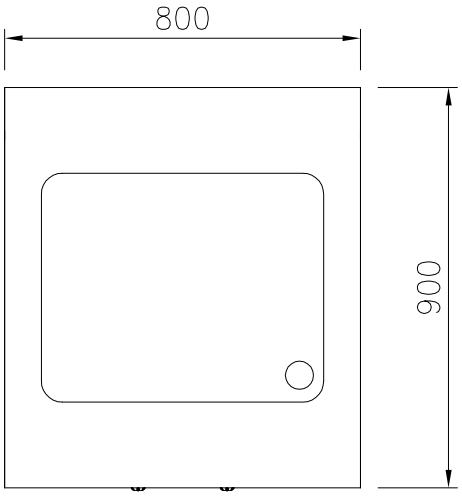

CHG 87.8140.004