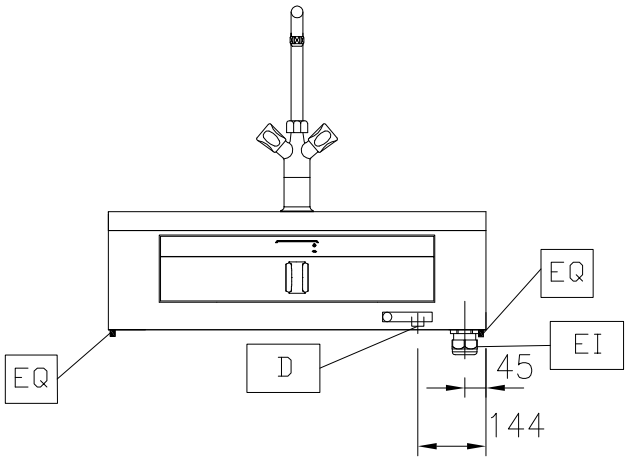

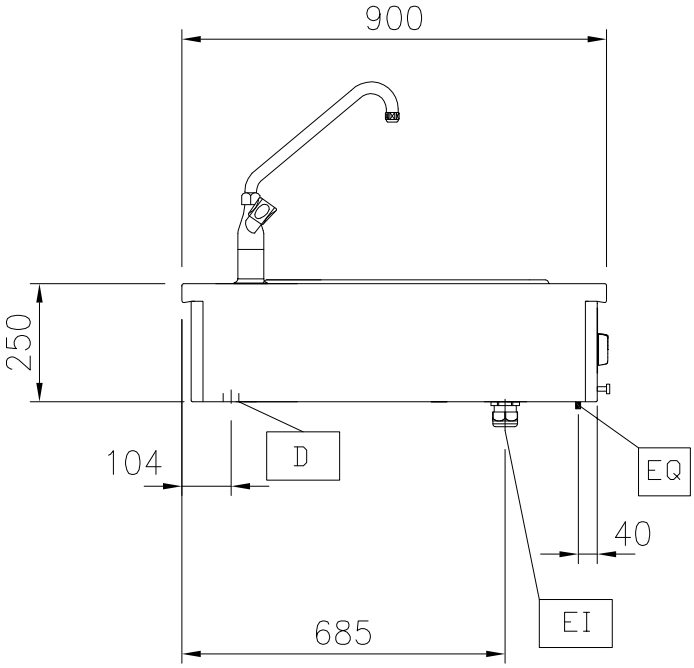

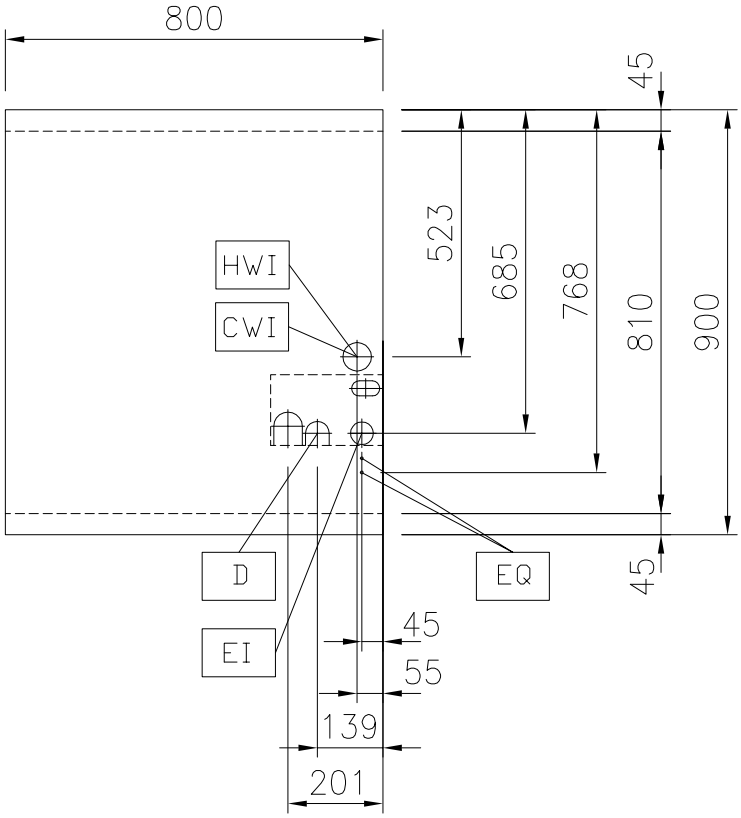

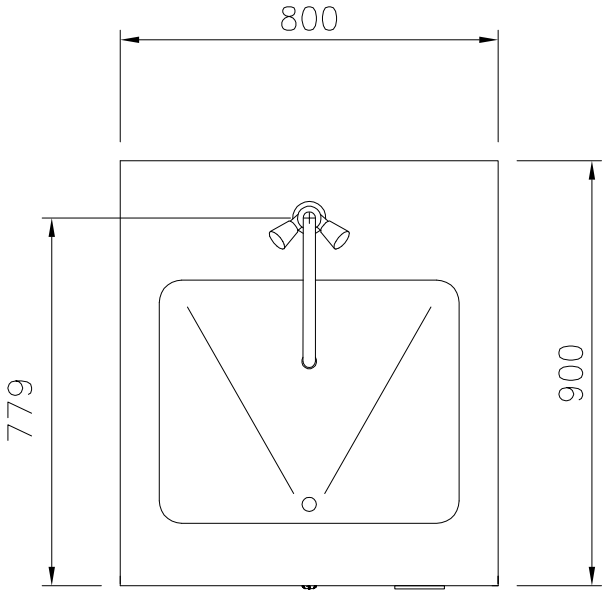

CHG 87.8128.002