Electrolux PROFESSIONAL

Warewashing
Pot&Pan Washer with Automatic Hood and Front/Side Feeding, Multi-Rack Support 833mm

ITEM #

MODEL #

NAME #

SIS #

AIA #

506065 (EPPWEASMS) Pot&Pan Washer, automatic hood, front/side feeding with multi-rack support

Short Form Specification

Item No.

304 AISI stainless steel front and side panels, wash tank, tank filter and wash and rinse arms. Double skinned, insulated, hood with automatic opening and closing with safety switch. N. 4 washing cycles and a self-cleaning cycle.
Built-in atmospheric, insulated water boiler (10,5 kW), 18-liter capacity, combined with rinse booster pump guarantee a constant hot rinse temperature of 84°C. Boiler with 304 welding for protection against corrosion.
Wash Safe Control assures the correct water temperature and pressure during the rinse phase to guarantee a perfect rinsing performance independent from the water pressure in the network (min. 0,5 bar).
Thermometer. Electronic control board with digital display.
Pre-arrangements for connection to an automatic detergent dispenser.
Direct through-feed using loading/unloading tables or front-feed loading.
Cell dimensions mm730x660x625h (WXDXH).
Load capacity: n.3x1/1 GN.
Supplied with: n. 1 basket in stainless steel and n. 1 rack for containers and trays.

APPROVAL:

Main Features

- Simple service from the front.
- 4 washing programs (one program is continual).
- Atmospheric insulated boiler combined with the rinse booster pump for perfect rinsing results (water temperature and pressure always constant during rinsing cycles), independent from the inlet water pressure.
- Automatic start on hood closure.
- Low noise level <70dBA.
- Side through-feed using manual loading and unloading tables or direct manual front-feed loading.
- Large strainer boxes above the water surface and extra strainer in the tank bottom at the pump inlet.
- Self-cleaning cycle to automatically sanitize the dishwasher after use.
- Final rinse only starts when the correct temperature has been reached (waiting device).
- Pre-arrangements for automatic detergent and rinse-aid dispenser.
- Electronic control panel and digital display.
- Adjustable pressure for the lower wash system, according to the weight of the items being washed.
- Automatic boiler empty button.
- Easy to remove wash/rinse arms for cleaning.

Construction

- Unit to feature smooth surfaces to facilitate cleaning.
- 304 AISI stainless steel front and side panels, wash tank, tank filter and wash and rinse arms.
- No pipes inside the washing chamber.
- Double-walled construction reduces the levels of noise and heat emitted.
- Double rack support suitable to use also standard rack of 500x500mm.

Sustainability

- Finished in top quality materials to ensure durability.
- Automatic hood opening and closing through safety switch.

Included Accessories

- 1 of Extra rack for containers and trays PNC 864182
- 1 of Extra stainless steel basket for pot washer 700mm PNC 864189

Optional Accessories

- Filter for partial demineralization PNC 864017 ❑
- Kit to measure total and partial water hardness PNC 864050 ❑
- Extra rack for containers and trays PNC 864182 ❑
- Extra stainless steel basket for pot washer 700mm PNC 864189 ❑
- Filter for total demineralization PNC 864367 ❑

- Kit for trays in Potwashers PNC 864471 ❑

The company reserves the right to make modifications to the products without prior notice. All information correct at time of printing.

Electrolux PROFESSIONAL

Warewashing
Pot&Pan Washer with Automatic Hood and Front/Side Feeding, Multi-Rack Support 833mm

Front

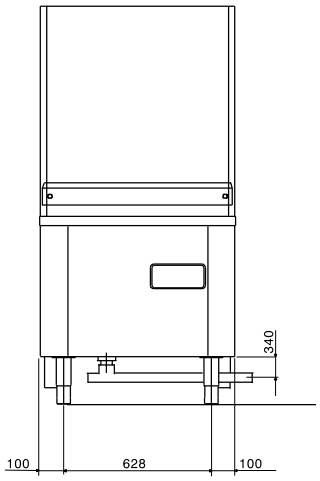

Side

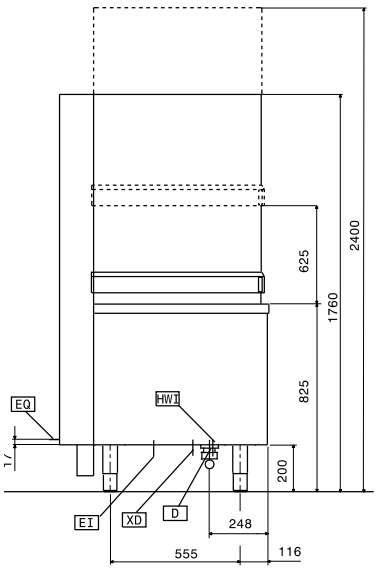

D = Drain
EI = Electrical inlet (power)
EO = Electrical Outlet
HWI = Hot water inlet

Top

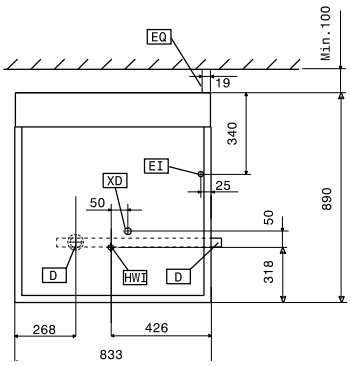

Electric

Supply voltage:	
506065 (EPPWEASMS)	400 V/3N ph/50 Hz
Default Installed Power:	13.5 kW
Electrical power max.:	20.5 kW
Total Installed Power:	20.5 kW
Boiler heating elements:	
Wash pump power:	2.5 kW
Rinse pump power:	0.28 kW

Water:

Pressure, bar min/max:	0.5-7 bar
Water supply temperature*:	50 °C
Washing tank capacity (lt):	95
Boiler Capacity (lt):	18
Washing cycle electrical elements:	7 kW
Hot rinse cycle duration (sec.):	ISO 9001; ISO 14001
Min hot rinse water consumption (lt/cycle)**:	6.2

Key Information:

Washing cycle temperature:	55-65 °C
Hot rinse cycle temperature:	84 °C
Working cycles time (sec.):	180/360/540/inf / / / /
N° of working cycles:	4 (180/360/540/inf)
Cell dimensions - width:	730 mm
Cell dimensions - depth:	660 mm
Cell dimensions - height:	625 mm
External dimensions, Width:	833 mm
External dimensions, Depth:	890 mm
External dimensions, Height:	1760 mm
Net weight:	200 kg

Sustainability

Noise level:	<70 dBA
Rinsing water consumption (per cycle):	6.2 lt

The company reserves the right to make modifications to the products without prior notice. All information correct at time of printing.

2024.10.19