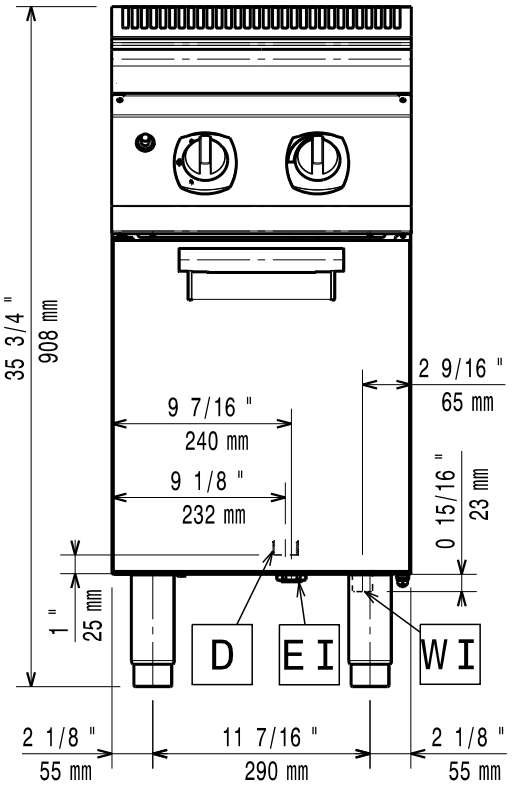
35 3/4 "
908 mm
9 7/16 "
240 mm
9 1/8 "
232 mm
2 9/16 "
65 mm
0 15/16 "
23 mm
1 "
25 mm
D
EI
WI
2 1/8 "
55 mm
11 7/16 "
290 mm
2 1/8 "
55 mm

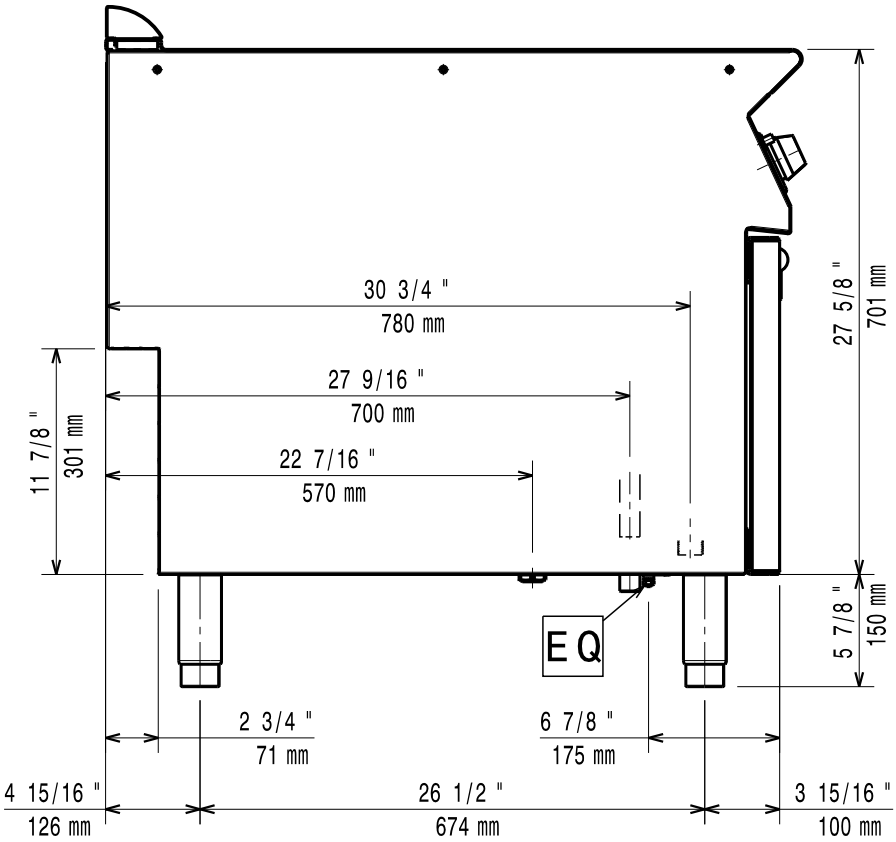
30 3/4 "
780 mm
27 9/16 "
700 mm
22 7/16 "
570 mm
11 7/8 "
301 mm
27 5/8 "
701 mm
5 7/8 "
150 mm
EQ
2 3/4 "
71 mm
6 7/8 "
175 mm
4 15/16 "
126 mm
26 1/2 "
674 mm
3 15/16 "
100 mm

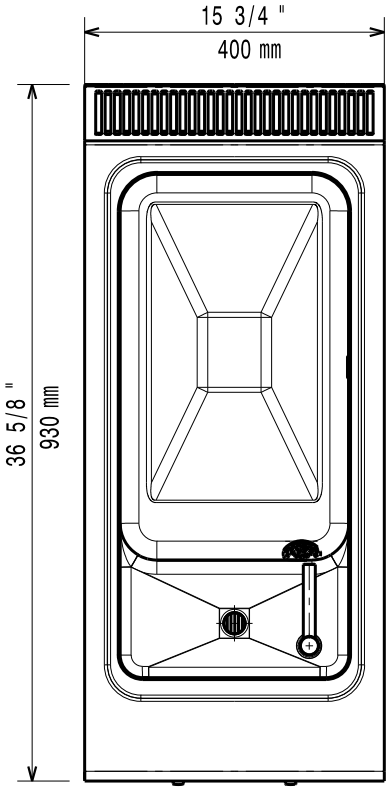
15 3/4 "
400 mm
36 5/8 "
930 mm

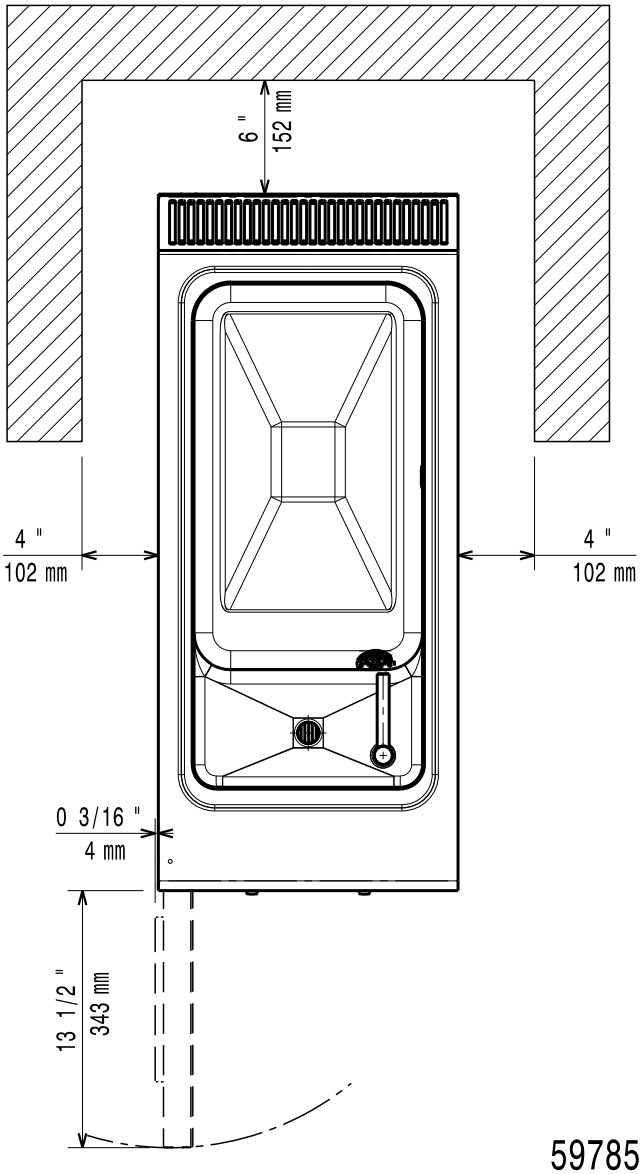
6 "
152 mm
4 "
102 mm
4 "
102 mm
0 3/16 "
4 mm
13 1/2 "
343 mm

597856700