Electrolux PROFESSIONAL

Modular Cooking Range Line 900XP Gas PowerGrill Top HP 1200mm

ITEM #

MODEL #

NAME #

SIS #

AIA #

391066 (E9GRGLGC0P) Large gas PowerGrill Top - HP

Short Form Specification

Item No.

To be used with natural or LPG gas. High efficiency 31.5 kW stainless steel burners with self stabilizing flame. Cooking surface grids in enameled cast iron, easily removable for cleaning. Stainless steel AISI 441 deflective shields below radiants avoid burner clogging. Includes drip tray for the collection of grease and fat. Exterior panels of unit in stainless steel with Scotch Brite finish. Extra strength work top in heavy duty 2 mm stainless steel. Right-angled side edges to allow flush-fitting junction between units.

APPROVAL:

Main Features

- Stainless steel AISI441 burners with self stabilizing flame.
- Burners are protected by AISI441 stainless steel deflector reaching approx. 700°C; top and side radiant plates distribute evenly the heating power while protecting the deflector from direct contact with the dripping fat, thus reducing flare ups (PATENT US9591947B2 and related family).
- Cooking grid reaching temperatures up to 350°C.
- Full-depth grease collection drawer, with hole to indicate when full, to collect residual cooking grease and fat. Can be filled-up with water for vapor-emission effect.
- Stainless-steel removable splash guards on the rear and sides
- All components (deflector, radiant plates, cooking grids, splash guards) can be dismantled for cleaning purposes.
- "Power Control" exclusive function: control knob allows fine-tuning of the power on a 240° rotation range between max and min, to optimize consumption while perfectly adapting to the food being cooked.
- "Stand-by" position on the control knob allows minimizing power consumption during non-peak periods, while allowing a fast recovery at the moment of need.
- The special design of the control knob system guarantees against water infiltration.
- Cooking grids made in highly resistant enameled cast iron for easy cleaning.
- Suitable for countertop installation.

Construction

- Side and rear panel in AISI 304 stainless steel.
- Unit is 930 mm deep to give a larger working surface area.
- All exterior panels in Stainless Steel with Scotch Brite finishing.
- AISI 304 stainless steel worktop, 2mm thick.
- Model has right-angled side edges to allow flush fitting joints between units, eliminating gaps and possible dirt traps.
- All the functional components are accessible via the front of the appliance.

Optional Accessories

- Junction sealing kit PNC 206086 ❑
- Support for bridge type installation, 1200mm PNC 206139 ❑
- Support for bridge type installation, 1400mm PNC 206140 ❑
- Support for bridge type installation, 1600mm PNC 206141 ❑
- Flue condenser for 1/2 module, 120 mm diameter PNC 206310 ❑
- Scraper kit with hooks for HP grills PNC 206347 ❑

• Kit G.25.3 (NI) gas nozzles for 700 and 900 gas grills (standard and HP)	PNC 206462	❑
• Side handrail-right/left hand (900XP)	PNC 216044	❑
• Frontal handrail, 1200mm	PNC 216049	❑
• Frontal handrail, 1600mm	PNC 216050	❑

The company reserves the right to make modifications to the products without prior notice. All information correct at time of printing.

Modular Cooking Range Line 900XP Gas PowerGrill Top HP 1200mm

Front

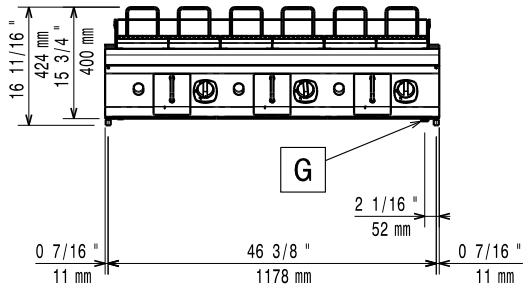

Side

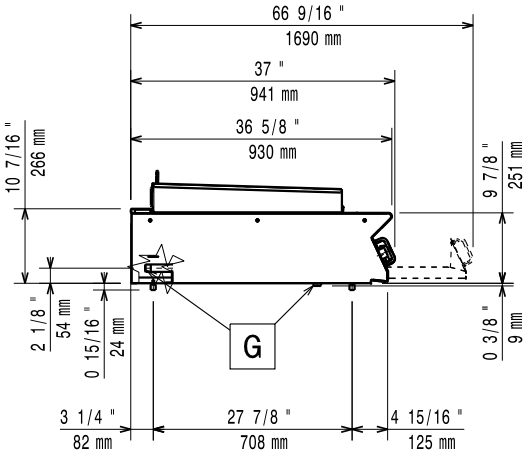

EQ = Equipotential screw
G = Gas connection

Top

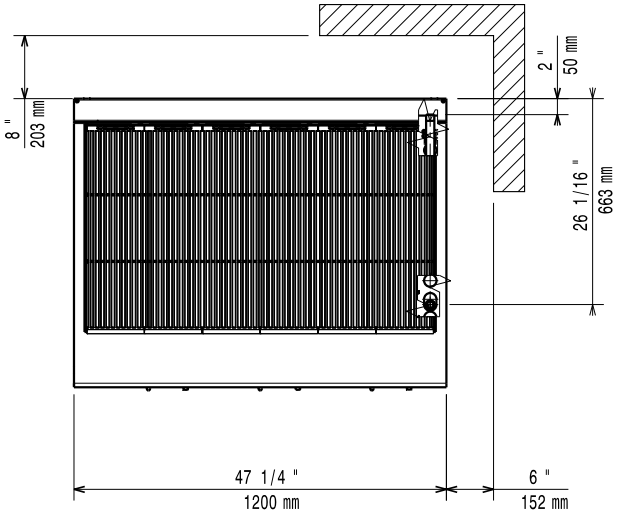

Gas

Gas Power:	
391066 (E9GRGLGC0P)	31.5 kW
Standard gas delivery:	Natural Gas G20 (20mbar)
Gas Type Option:	LPG;Natural Gas
Gas Inlet:	3/4"

Key Information:

Cooking surface width:	1113 mm
Cooking surface depth:	644 mm
External dimensions, Width:	1200 mm
External dimensions, Depth:	941 mm
External dimensions, Height:	250 mm
Net weight:	141 kg
Shipping weight:	165 kg
Shipping height:	580 mm
Shipping width:	1010 mm
Shipping depth:	1260 mm
Shipping volume:	0.74 m³
Certification group:	N9EGG

If appliance is set up or next to or against temperature sensitive furniture or similar, a safety gap of approximately 150 mm should be maintained or some form of heat insulation fitted.

The company reserves the right to make modifications to the products without prior notice. All information correct at time of printing.