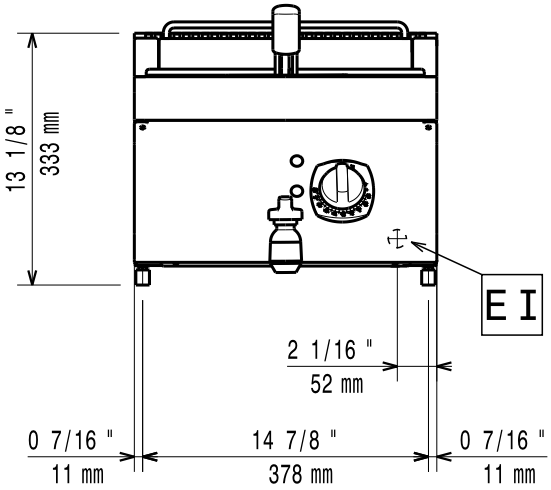
13 1/8 "
333 mm
EI
2 1/16 "
52 mm
0 7/16 "
11 mm
14 7/8 "
378 mm
0 7/16 "
11 mm

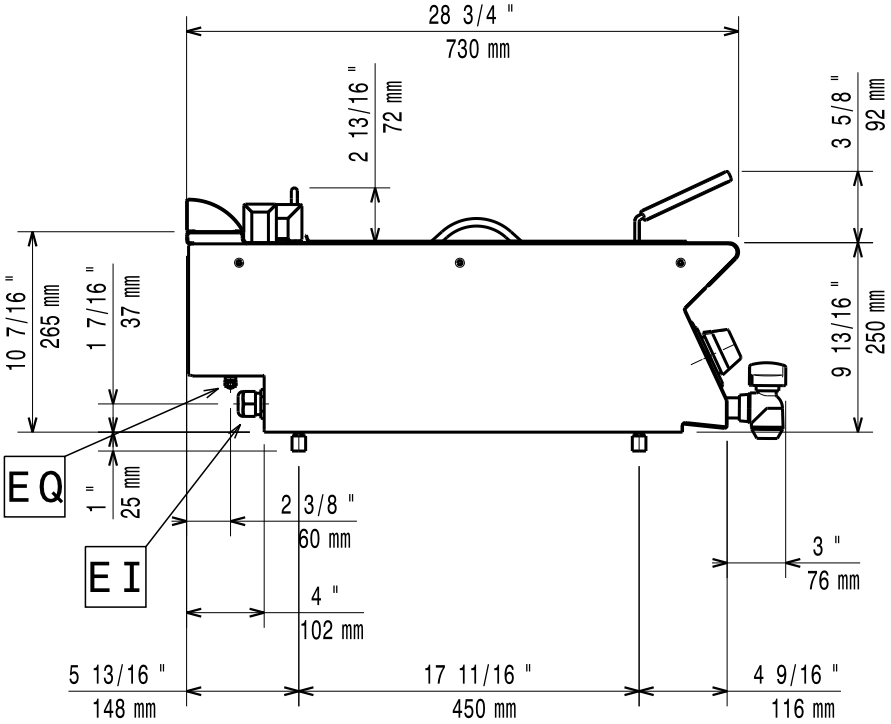
28 3/4 "
730 mm
2 13/16 "
72 mm
3 5/8 "
92 mm
10 7/16 "
265 mm
1 7/16 "
37 mm
9 13/16 "
250 mm
EQ
1 "
25 mm
EI
2 3/8 "
60 mm
3 "
76 mm
4 "
102 mm
5 13/16 "
148 mm
17 11/16 "
450 mm
4 9/16 "
116 mm

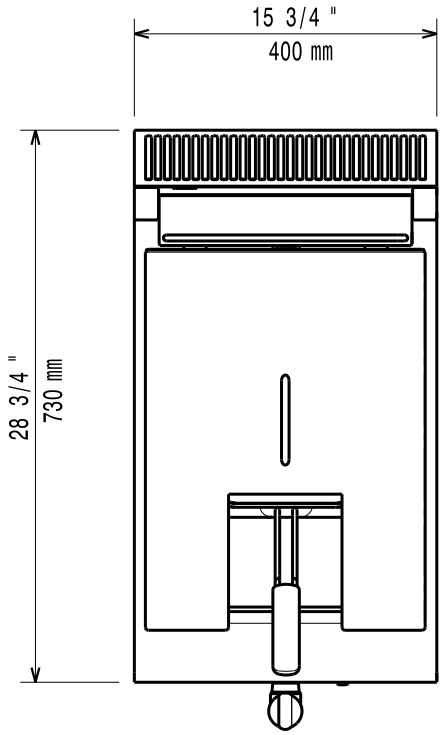
15 3/4 "
400 mm
28 3/4 "
730 mm

59785HY00